CycleOps Pro Series Indoor Cycles

User Guide

400 Pro
300 Pro
200 Pro
100 Pro

Deutsche Anweisungen www.cycleops.com/userguide
Istruzioni italiane www.cycleops.com/userguide
Nederlandse instructies www.cycleops.com/userguide
Norsk instruksjoner www.cycleops.com/userguide

CycleOps POWER

TABLE OF CONTENTS

CHAPTERS:

1. BEFORE BEGINNING.....1
2. UNPACKING THE CYCLEOPS PRO SERIES INDOOR CYCLE.....2
3. INDOOR CYCLE ASSEMBLY.....3
- **Attach Stabilizer Feet**
- **Attach Handlebar**
- **Attach Seat**
- **Level the Indoor Cycle**
- **Attach Pedals**

4. GENERAL USE.....6
- **Adjust Seat**
- **Adjust Handlebar**
- **Adjust Resistance**

5. COMMON ADJUSTMENTS.....8
- **Replace Speed Sensor Battery**
- **Replace Cadence Sensor Battery**
- **Replace Hub Batteries**
- **Adjust Flywheel/Chain Tension**
- **Adjust Brake Pad**

6. PREVENTATIVE MAINTENANCE.....10
7. ELECTRONICS.....11
8. RADIO FREQUENCY (RF) INTERFERENCE.....12
9. IMPORTANT PRECAUTIONS.....12
10. WARRANTY.....13

CHAPTER 1: BEFORE BEGINNING

Congratulations on choosing the CycleOps Pro Series indoor cycle! The CycleOps Pro Series indoor cycle takes cycling to the next level as the only indoor cycle to fit, feel and ride like an outdoor bike.

CycleOps Pro Series Indoor Cycle User Guide for:
-400 Pro
-300 Pro
-200 Pro
-100 Pro

Read this guide to learn how to:
-Assemble the indoor cycle
-Use the indoor cycle
-Make common adjustments

Visit www.cycleops.com to learn more about Saris Cycling Group and the CycleOps Pro Series indoor cycle:
-Register product for warranty
-View frequently asked questions
-View instructional videos
-View product and technical updates from CycleOps
-Sign up for CycleOps Power newsletter
-Learn more about training with power

CHAPTER 2: UNPACKING THE CYCLEOPS PRO SERIES INDOOR CYCLE

Place the box upright and cut the plastic binding straps. Lift the top of the box to expose the indoor cycle and packaging. Remove all parts from the box including foam inserts. Ensure all the following parts are included:

	Name	Quantity
A	Rear stabilizer	1
B	Front stabilizer	1
C	Main frame assembly	1
D	Handlebar post (shorter, reads to 18")	1
E	Seat post (longer, reads to 23")	1
F	Seat	1
G	Seat post clamp	1
H	Handlebar	1
I	Water bottle holder	1
J	End caps	2
K	End cap screws	4
L	Water bottle spacer	1
M	Large L handles	2
N	Small L handles	2
O	Stabilizer bolts	8
P	Stabilizer washers	8
Q	Multi-purpose wrench	1
R	6mm Allen wrench w/Phillips screw-driver end	1
S	5mm Allen wrench	1
T	4mm Allen wrench	1
U	3mm Allen wrench	1

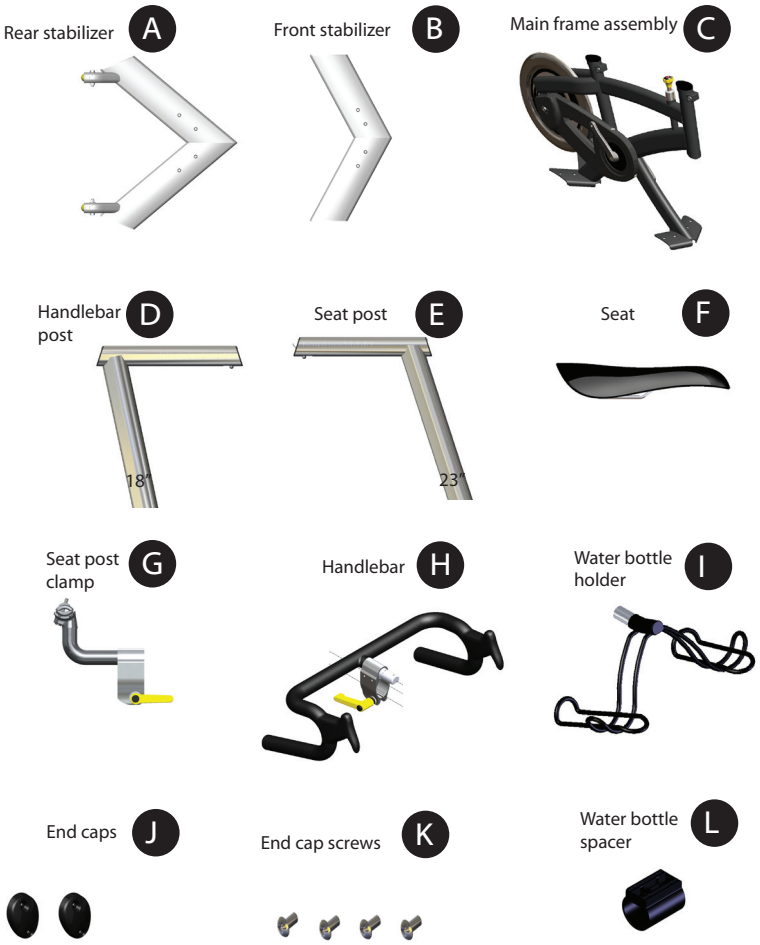

Additional tools that may be helpful:
-Vice Grips or small clamping tool
-17mm Cone wrench
-15mm box wrench
-10mm box wrench
-Pliers
-Pedal wrench
-2.5mm Allen wrench

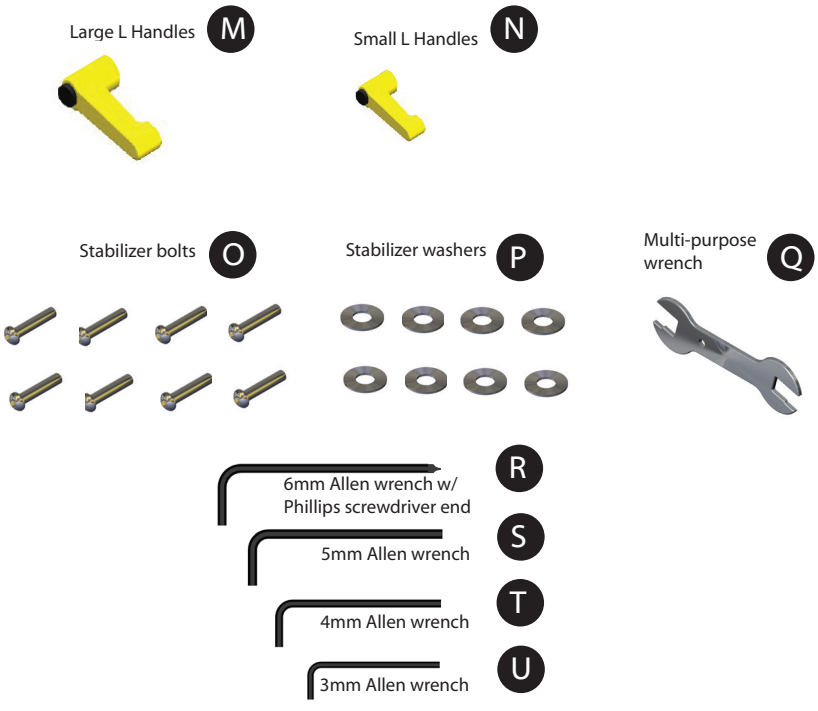

CHAPTER 3: INDOOR CYCLE ASSEMBLY

Attach Stabilizer Feet

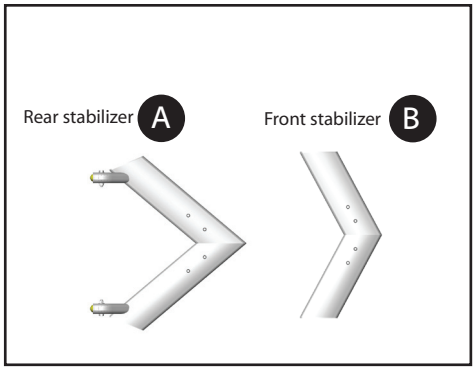

1. Note the difference between the front and rear stabilizers. The larger stabilizer with wheels goes in the rear of the indoor cycle (under the flywheel).

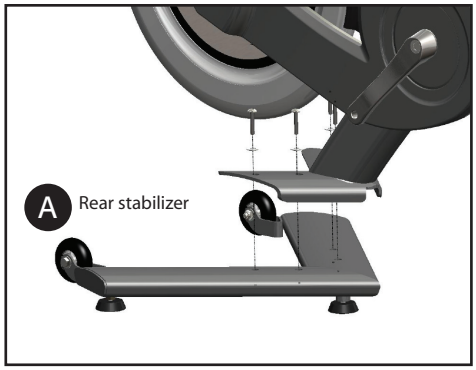

2. Attach the rear stabilizer to the rear of the main frame with four 5mm stabilizer bolts and stabilizer washers using the 5mm Allen wrench. Tighten the inner bolts first, and then proceed to the outer bolts to ensure the foot is secured properly and evenly.

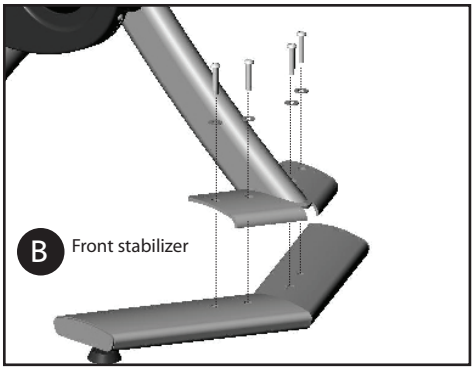

3. Attach the front stabilizer to the front of the main frame with four 5mm stabilizer bolts and stabilizer washers using the 5mm Allen wrench. Tighten the inner bolts first, and then proceed to the outer bolts to ensure the foot is secured properly and evenly.

Attach Handlebar

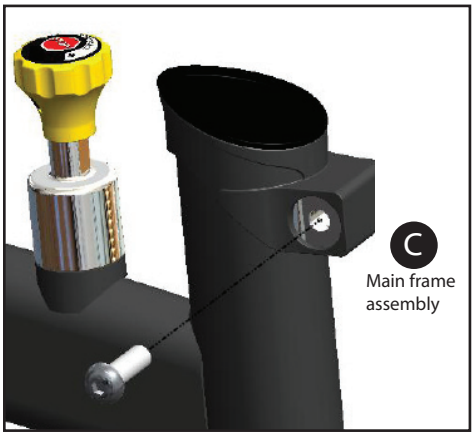

1. Remove 6mm bolt in main frame assembly using 6mm Allen wrench. The 6mm bolt can be kept in place of the large L handle for a more permanent placement of the handlebar height.

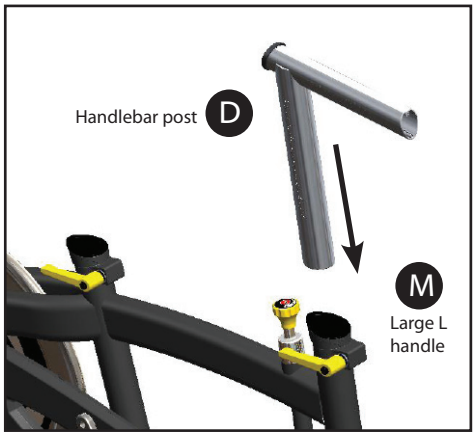

2. Insert the handlebar post into the head tube and secure it by inserting the large L handle into the main frame assembly on the right side of the indoor cycle (chain guard side).

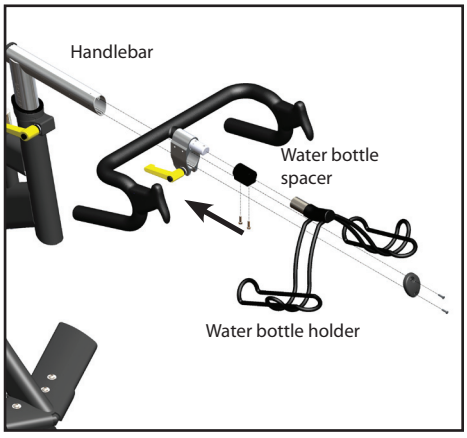

3. Slide the water bottle holder and water bottle spacer onto the road style handlebar.

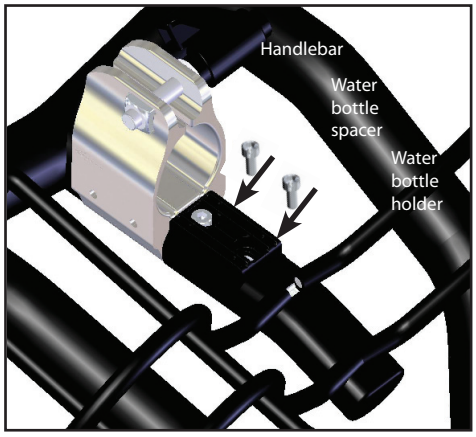

4. Secure the water bottle holder and handlebar together using the previously removed, two 4mm spacer bolts and washers, on the underside of the handlebar.

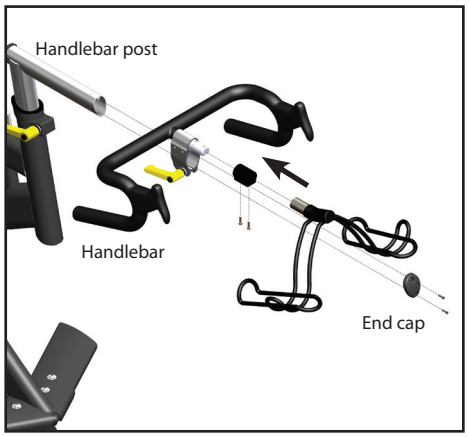

5. Carefully slide the road style handlebar assembly onto the handlebar post. Secure the plastic end cap to the handlebar post using two end cap screws with the Phillips screwdriver side of the 6mm Allen wrench.

6. Once the road style handlebar is in place, secure it with the small L handle on the right side of the indoor cycle (chain guard side).

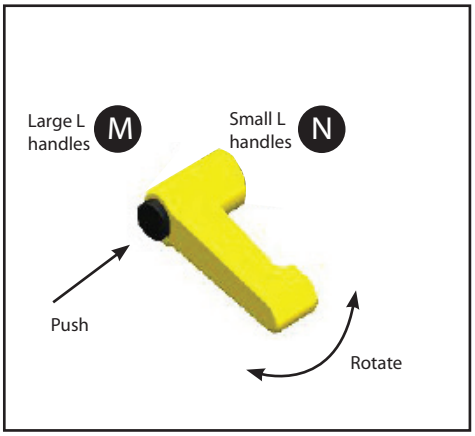

7 Push black button and rotate handle on small and large L handles to position the handle without tightening. Release the button and allow the handle to seat to tighten or loosen an adjustment.

Attach Seat

A seat has been included with the CycleOps Pro Series indoor cycle. If desired, the indoor cycle can accommodate an off-the-shelf seat to personalize the fit, feel and ride. In some instances, a shorter seat post clamp is required for individuals under five feet tall. If desired, contact Saris Cycling Group to purchase the short seat clamp.

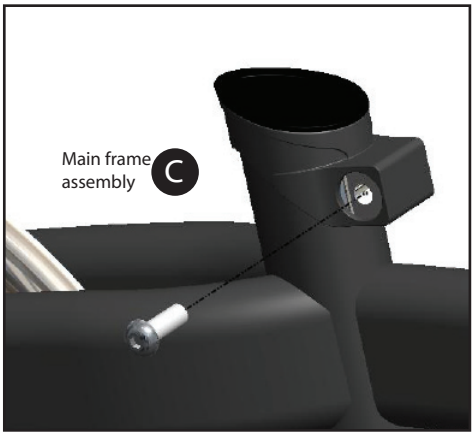

1. Remove 6mm bolt in main frame assembly using 6mm Allen wrench. The 6mm bolt can be kept in place of the large L handle for a more permanent placement of the seat post height.

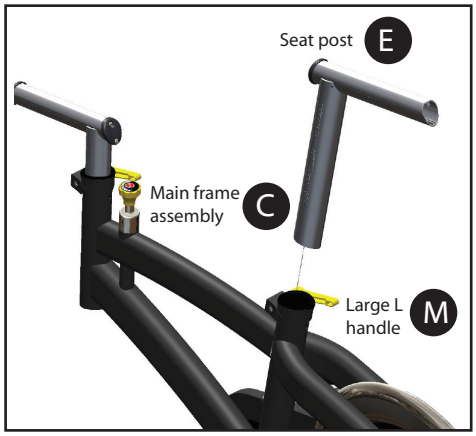

2. Insert seat post into the seat tube and secure it by inserting the large L handle into the main frame assembly on the right side of the indoor cycle (chain guard side).

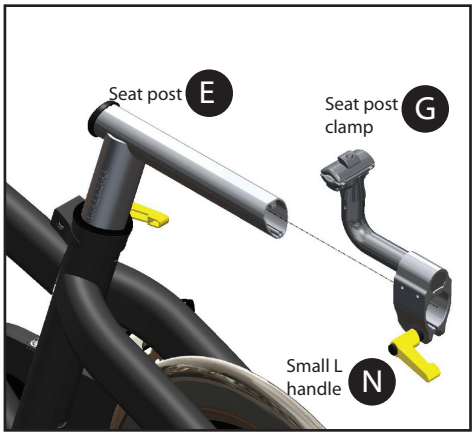

3. Attach the seat post clamp to the seat post. Once the seat is level, properly tighten with the small L handle.

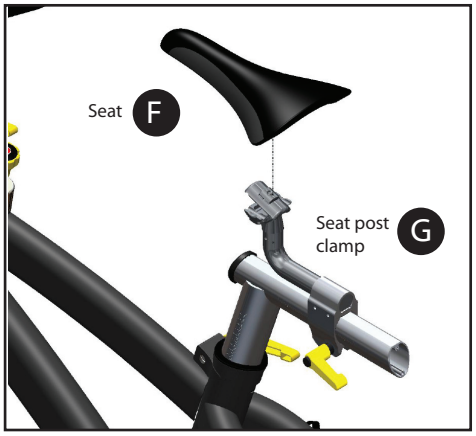

4. Attach seat to seat post clamp.

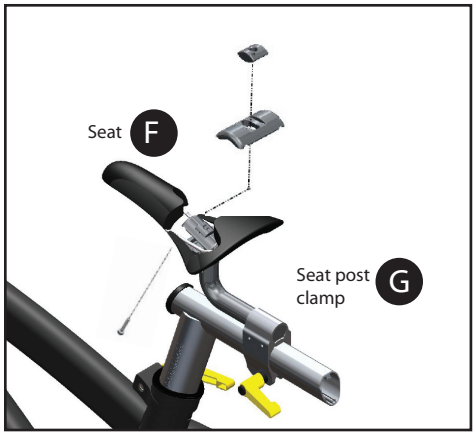

5. Loosen the 6mm bolt and place seat rails within the clamp. Adjust to desired seat placement using 6mm Allen wrench.

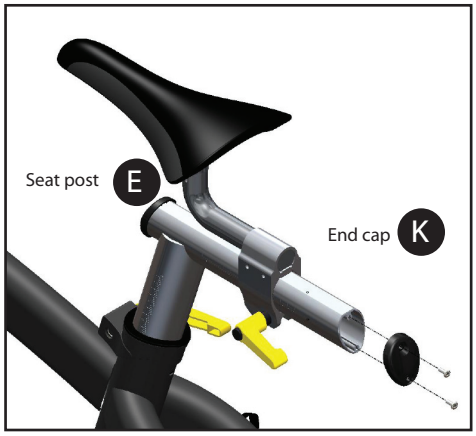

6. Secure the plastic end cap to the seat post using two end cap screws with the Phillips screwdriver side of the 6mm Allen wrench.

Level the Indoor Cycle

Move the indoor cycle to where it will be used and level it by rotating the adjustable feet underneath the stabilizers. Leveling the indoor cycle helps ensure a stable and quiet ride and reduces wear on the frame. When adjusted properly, there is no rocking movement from one foot to the other.

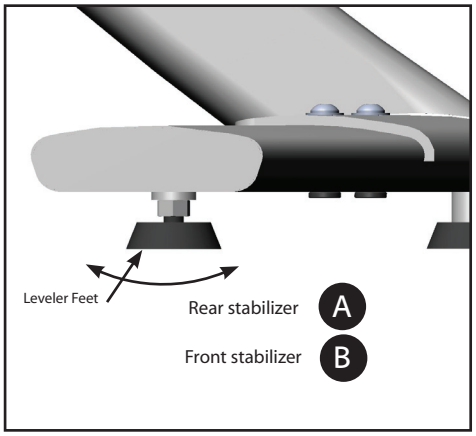

1. If necessary, the four outer leveler feet can be adjusted. Turn stabilizer feet clockwise to lower the indoor cycle. Turn stabilizer feet counterclockwise to raise indoor cycle.

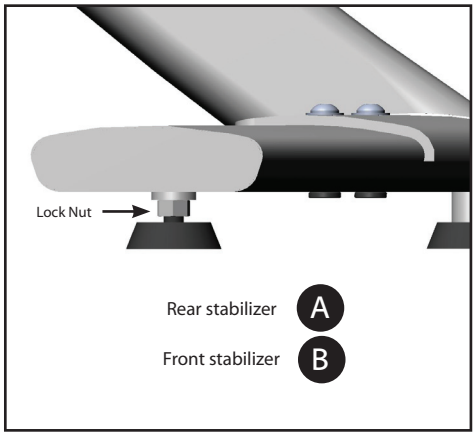

2. Secure the leveler feet by tightening the lock nuts, with the multi-purpose wrench, flush against the bottom of the rear and/or front stabilizer.

Attach Pedals

If desired, the CycleOps Pro Series indoor cycle can accommodate any standard pedals to personalize the fit, feel and ride. Install using the pedal manufacturer's specifications. Improper installation can result in damage to the crank. Damage caused by improper pedal installation is not covered under warranty.

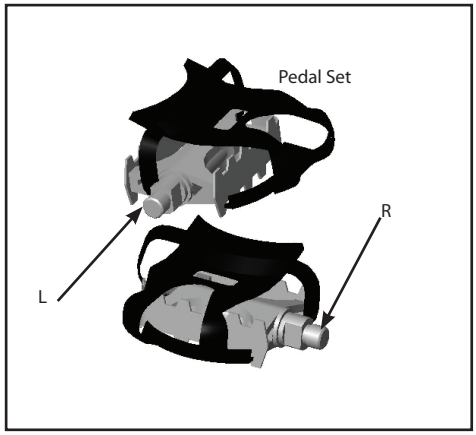

1. Attach the pedals onto the indoor cycle with the multi-purpose wrench included or a pedal wrench (not included). Each pedal is marked with an "R" or an "L" on the spindle. This mark indicates which side of the indoor cycle the pedal is intended to mount on. This is important because the thread directions are different for each pedal.

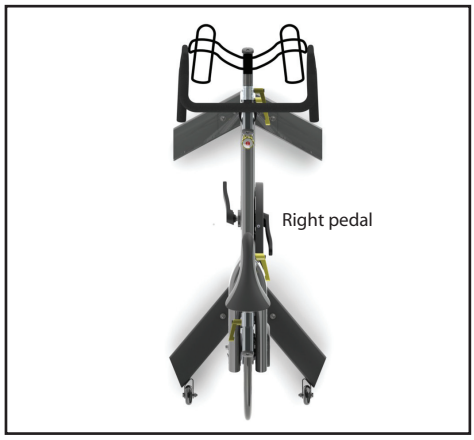

2. Locate the "R" pedal. This pedal is for the right side of the indoor cycle (chain guard side). Turn the spindle clockwise to tighten. Tighten pedals using the multi-purpose wrench or using a pedal wrench to 300 in-lbs.

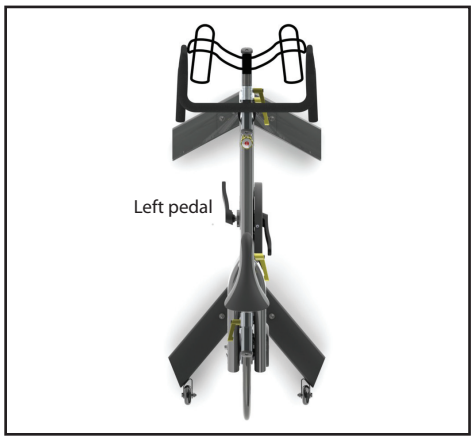

3. Locate the "L" pedal. This pedal is for the left side of the indoor cycle (no chain guard side). Turn the spindle counter-clockwise to tighten, because this pedal is reverse threaded. Tighten pedals using the multi-purpose wrench or using a pedal wrench to 300 in-lbs.

CHAPTER 4: GENERAL USE

The CycleOps Pro Series indoor cycle is easy to use. Adjust the seat and handlebar to alter the ride position. Adjust resistance to change pace/cadence.

Adjust Seat

1. Adjust seat position to maximum exercise efficiency, comfort, and reduce risk of injury. Stop the flywheel and dismount the indoor cycle before making adjustments.

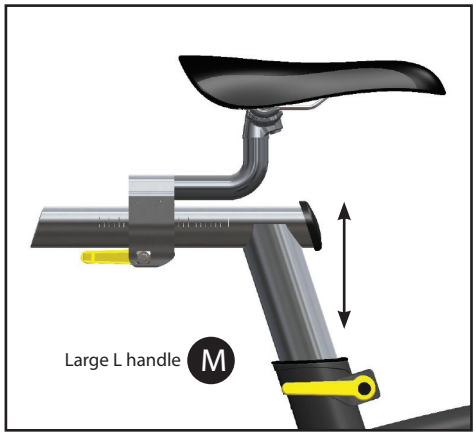

2. Turn large L handle counterclockwise to loosen. Raise or lower the seat post to the desired height. Turn large L handle clockwise to tighten.

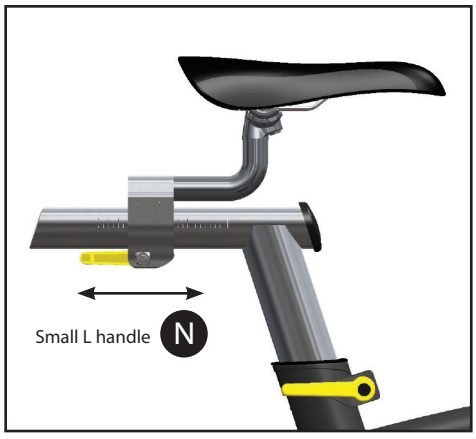

3. Turn small L handle counterclockwise to loosen. Move the seat post clamp and seat forward or back, to achieve proper position. Turn small L handle clockwise to tighten.

Adjust Handlebar

1. Adjust handlebar to maximize comfort or duplicate outdoor riding position. Stop the flywheel and dismount the indoor cycle before making adjustments.

2. Turn large L handle counterclockwise to loosen. Raise or lower the handlebar post to the desired height. Turn large L handle clockwise to tighten.

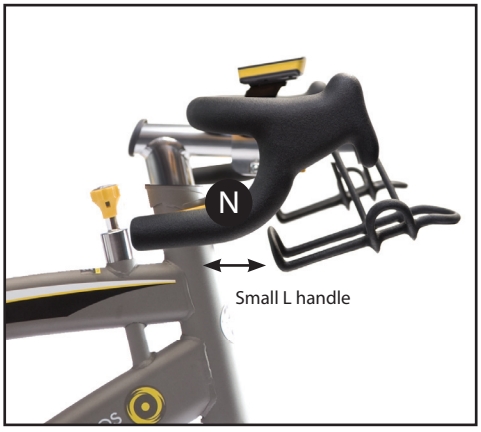

3. Turn small L handle counterclockwise to loosen. Move the handlebar forward or back to achieve proper handlebar position. Turn small L handle clockwise to tighten.

Control Resistance (100 Pro, 200 Pro, 300 Pro only)

The CycleOps Pro Series indoor cycle allows the user full control over resistance by adjusting the resistance knob. Lower resistance levels enable the pedals to turn at a faster (less difficult) pace/cadence. Higher resistance levels enable the pedals to turn at a slower (more difficult) pace/cadence.

1. Control pedaling resistance by using the resistance knob located behind the handlebar on the top tube of the main frame assembly.

2. Turn the knob clockwise (+) to increase resistance. Turn the knob counterclockwise (-) to decrease resistance.

3. In case of emergency or before dismounting the indoor cycle, press directly down on the resistance knob to bring the flywheel to an abrupt stop.

Adjust Resistance (400 Pro only)

Pedaling resistance is automatically controlled by the Joule display, located on the handlebar. Reference the Joule user guide for more information.

CHAPTER 5: COMMON ADJUSTMENTS

Replace Speed Sensor Battery (200 Pro only)
Over time, the lithium battery in the speed sensor will need to be changed. See Preventative Maintenance for when to replace.

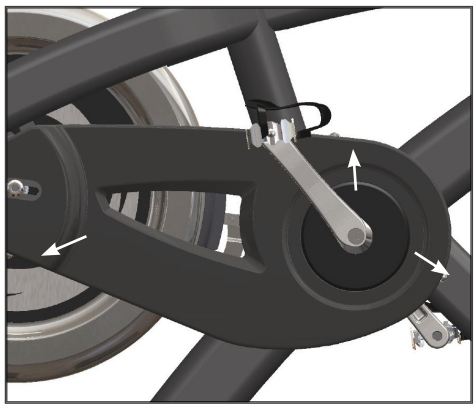

1. Using a 4mm Allen wrench, remove the three chain guard bolts and remove the chain guard.

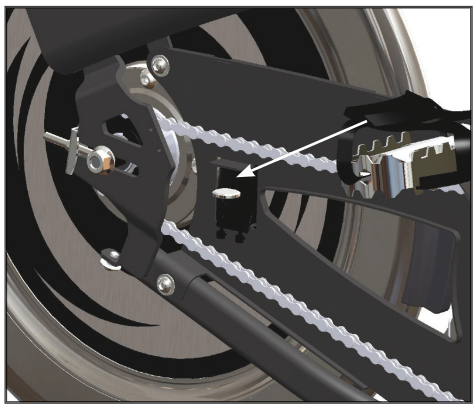

2. Locate speed sensor next to hub.

3. Replace the battery with a compatible CR2032.

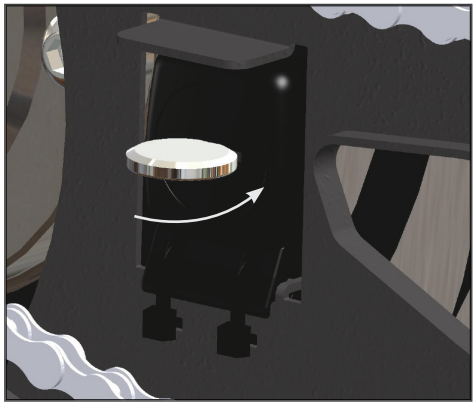

4. Using the new battery, remove the battery cover on the back of the sensor by turning counterclockwise approximately one half turn.

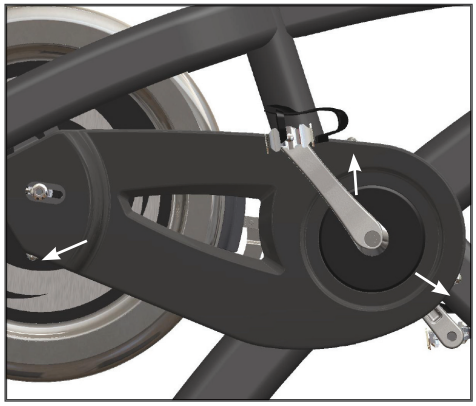

5. Using a 4mm Allen wrench, and three chain guard bolts, reattach the chain guard.

Replace Cadence Sensor Battery (200 Pro only)
Over time, the lithium battery in the cadence sensor will need to be changed. See Preventative Maintenance for when to replace.

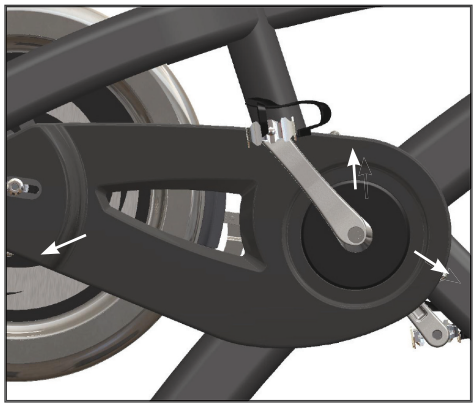

1. Using a 4mm Allen wrench, remove the three chain guard bolts and remove the chain guard.

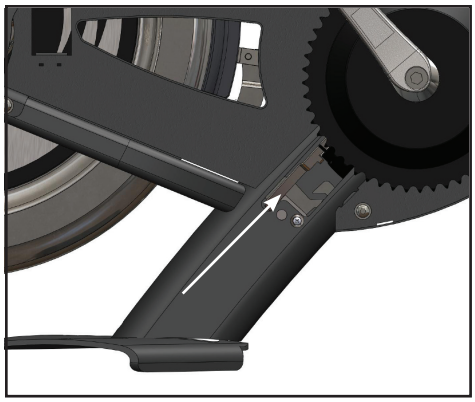

2. Locate the cadence sensor inside main frame.

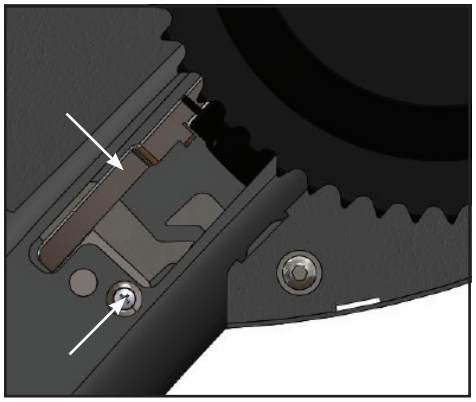

3. Using 4mm Allen wrench, remove the bolt attaching the cadence sensor (be sure to hold the cadence sensor arm to avoid dropping the cadence sensor in the main frame). Slide cadence sensor out of the main frame.

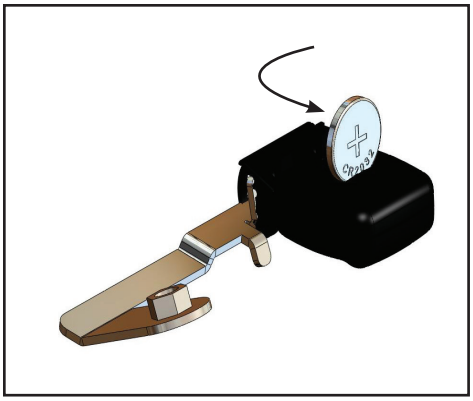

4. Using the new battery (compatible CR2032), remove the battery cover on the back of the cadence sensor by turning counterclockwise approximately one half turn. Replace the old battery with the new battery.

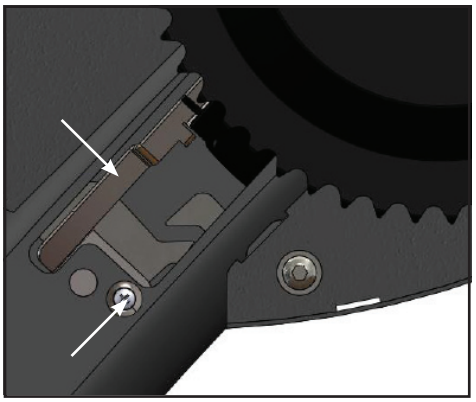

5. Secure the cadence sensor to the main frame using the previously removed bolt and 4mm Allen wrench. Be sure to hold the cadence sensor arm while attaching bolt.

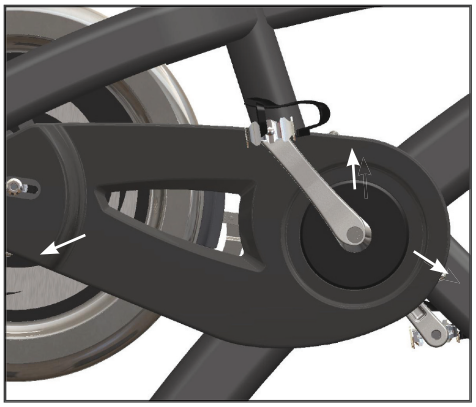

6. Using a 4mm Allen wrench and three chain guard bolts, reattach the chain guard.

NOTE: After replacing the battery, Joule must relearn the coded ID for the sensor. Reference Joule user guide for instructions (available at www.cycleops.com).

Replace Hub Batteries (400 Pro/300 Pro only)

Over time, the batteries that power the electronics in the hub will need to be changed. See Preventative Maintenance for when to replace. The CycleOps Pro Series indoor cycle uses two AA batteries. The battery cap is split to make this task as easy as possible.

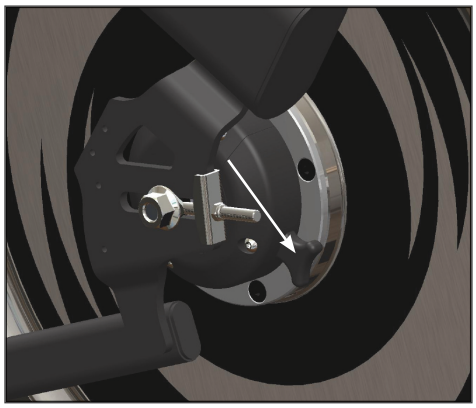

1. Rotate the flywheel to access the bolt on the handle side of the battery cap.

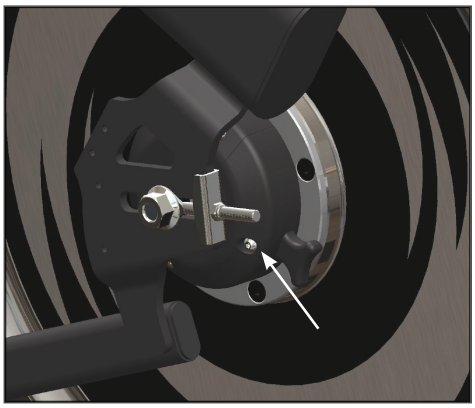

2. Using a 2.5mm Allen wrench, remove the bolt on the battery cap. Pull the plastic battery cap away from the hub using the molded handle.

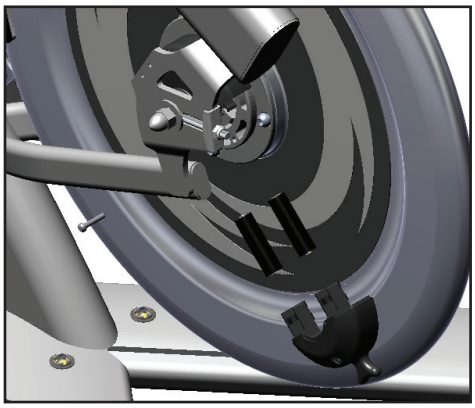

3. Replace the batteries, paying close attention to properly line up the +/- poles, then replace the battery cap and tighten the bolt.

Adjust Flywheel/Chain Tension

Over time and after substantial use, the chain on the CycleOps Pro Series indoor cycle will stretch. Adjusting the tension/alignment is a difficult task and improper adjustment can lead to premature chain/cog wear. It is recommended this task be done with assistance from an authorized indoor cycle dealer. The chain tension has been adjusted properly when there is little or no play felt when the pedals are rocked back and forth.

NOTE: Be sure to make small incremental adjustments to the tensioning hardware on both sides of the flywheel. Only adjusting one side will lead to improper flywheel alignment and unwanted drive train wear and/or noise.

CAUTION: Improper chain adjustment will cause premature wear and may void the warranty.
CAUTION: NEVER put hands into or near the drive train while it is motion!

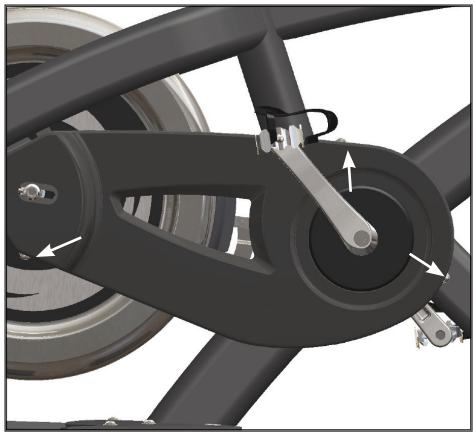

1. Using a 4mm Allen wrench, remove the three chain guard bolts.

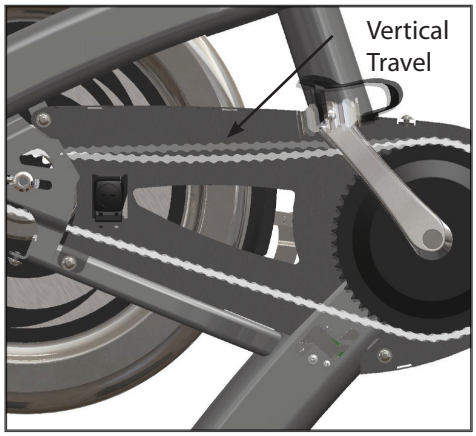

2. Pull chain down (midway between chain ring and gear) to measure vertical travel. Vertical travel should be approximately 1/4". Vertical travel with significantly more or less than 1/4" should be adjusted.

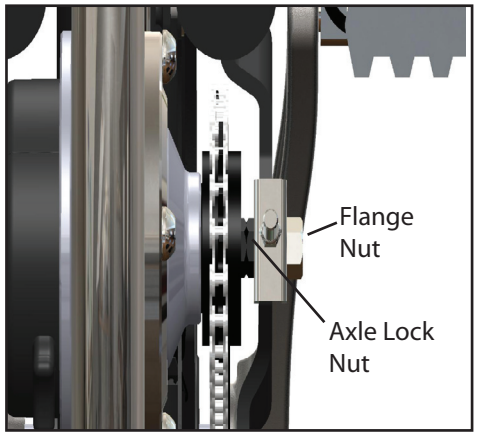

3. Use a 17mm cone wrench to hold the axle locking nuts in place. Do not turn the wrench, it is only used as a stabilizer. With the other hand, use a 15mm box wrench to loosen the flange nuts on the axle. Repeat this process on each side of the flywheel.

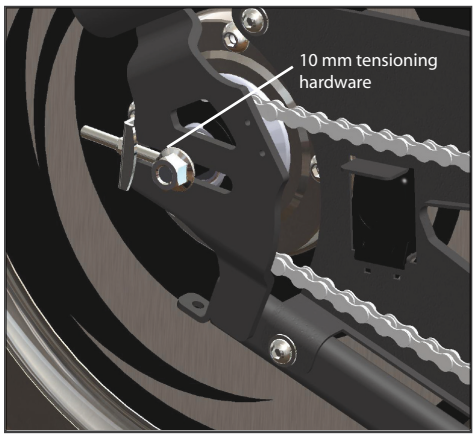

4. Using a 10mm box wrench, adjust the tensioning hardware until the proper chain tension is achieved evenly on both sides.

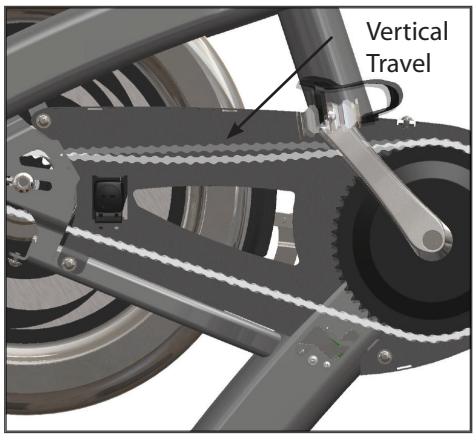

5. Pull chain down (midway between chain ring and gear) to measure vertical travel. Vertical travel should be approximately 1/4" when the chain has been properly adjusted. Tighten flange nuts to 75 in-lbs. Do not overtighten.

Adjust Brake Pad (100 Pro, 200 Pro, 300 Pro only)

The brake mechanism has been adjusted at the factory. However, over time due to chain stretch and brake pad wear, it may need to be adjusted. To replace/adjust brake pad, use the following procedure:

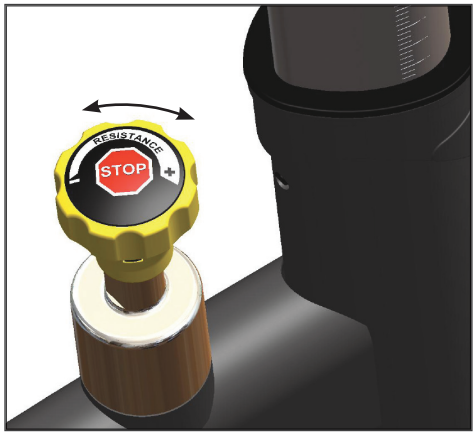

1. Back off resistance until it the knob stops turning (counterclockwise). Then turn clockwise 180 degrees (1/2 turn).

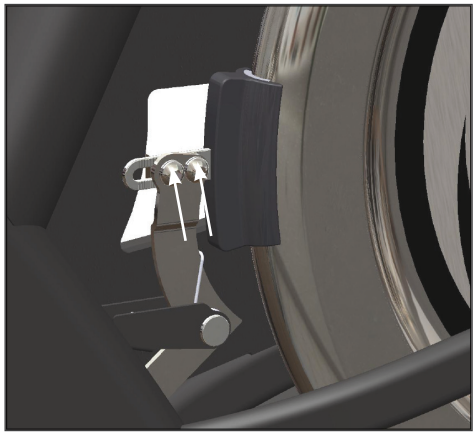

2. Loosen the clamping bolts with a 5mm Allen wrench. Align the brake pad by sliding it towards the flywheel. Stop when the pad just touches the flywheel. Align the arc of the brake pad with the arc of the flywheel.

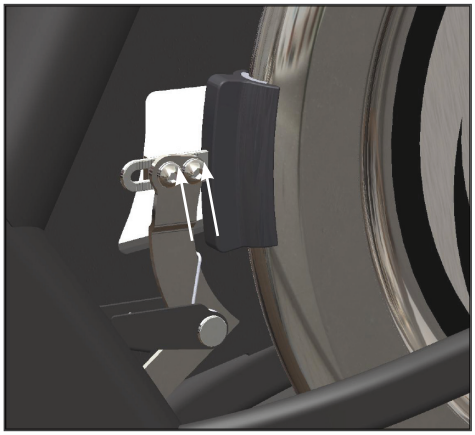

3. Tighten clamping bolts to 50 in-lbs. When properly adjusted, the CycleOps Pro Series indoor cycle should register around 30 watts at 90 rpm at the lowest resistance setting (can only be validated on 300 Pro).

Adjust Brake Pad (400 Pro only)

The brake mechanism has been adjusted at the factory and has an electronically adjusted brake pad. Instead of manually adjusting the brake pad, plug the indoor cycle in for 60 seconds and then remove the plug. This resets and places the brake pad in the furthest position (lightest resistance).

CHAPTER 6: PREVENTATIVE MAINTENANCE

Performing necessary preventative maintenance is key to keeping the CycleOps Pro Series indoor cycle in proper working condition. Following the recommended maintenance procedures will help extend the life of the CycleOps Pro Series indoor cycle.

NOTE: Never use abrasive cleaning liquids or petroleum-based solvents when wiping down the indoor cycle. ANY CLEANING LIQUIDS MUST BE OF A MILD PH such as Dawn dish washing liquid, Pine Sol, Murphy's Oil Soap and Mr. Clean. A standard bike polish can be used on the painted parts of the indoor cycle.

DAILY

After each day the indoor cycle is ridden, perform the following:

- Release all tension from the resistance knob.
- Wipe down the handlebar.
- Wipe down seat/seat post.
- Wipe down flywheel.
- Wipe down frame.
- Wipe down chain guard.
- Wipe down resistance knob.
- Wipe down handlebar post.
- Wipe down stabilizers.

WEEKLY
In addition to daily maintenance, perform the following each week:

- Inspect and adjust brake pad.
- Properly tighten pedals and all hardware attaching toe clips/straps (if applicable). Tighten pedals to 300 in-lbs.
- Inspect handlebar clamp assembly. Tighten clamp bolt if loose.
- Inspect seat post clamp and clamp assembly. Tighten clamp bolt if loose.
- Inspect stabilizer feet. Tighten if necessary.
- Inspect flywheel. Check for proper alignment. Tighten flange locking nuts to 75 in-lbs.

MONTHLY
In addition to daily and weekly maintenance, perform the following each month:

- Remove handlebar post and seat post and clean both the tubes as well as inside the plastic sleeves. Inspect the sleeves for scoring. Replace if there is vertical slippage.
- Clean the underside of the stabilizer feet.
- Clean the flywheel with mild detergent or a damp cloth.
- Check the chain tension to ensure that the chain is properly adjusted.
- Inspect brake pads for wear. Replace pads if there is less than 2mm of felt pad exposed.

BIANNUAL
In addition to daily, weekly and monthly maintenance, perform the following every six months:

- Lubricate chain using the lubrication port on the back of the chain guard. Liberally spray a Teflon-based lubricant onto the chain. Be sure each link gets lube. Be careful not to over-lubricate the chain. Excess lube will drip out and can stain floors/carpet.

ANNUAL
In addition to daily, weekly, monthly and biannually maintenance, perform the following after extended use (this may or may not be annually):

- Apply a light coating of lithium grease on the threads of the stabilizer bolts, stabilizer feet and pedals. This prevents the parts from seizing over time.
- Replace batteries in hub or sensor.

CHAPTER 7: ELECTRONICS

The CycleOps Pro Series indoor cycle (200 Pro, 300 Pro and 400 Pro) includes the Joule display. Visit www.cycleops.com for more information regarding Joule. Some specific information relevant to the CycleOps Pro Series indoor cycle includes:
-Mounting Joule bracket and Joule

-Adjusting controlled resistance

Technical Specifications:
Weight Limit 300 pounds
Standard Height Range 5’5” to 6’6”
Q Factor 168mm (outside to outside)
Crank Arm Length 170mm
PowerTap Accuracy +/-1.5% (400 Pro/300 Pro only)
Signal Transmission: ANT+
Operational Temperature 0 to 40 degrees Celsius or 32 to 104 Fahrenheit
Battery Life (Hub) 1000 hours approx.
Battery Life (Joule) 20 hours approx.

Hub battery type: two AA type 1.5 volt
Joule battery type: rechargeable
Freehub fixing bolt torque 300 inch-lbs.

CHAPTER 8: RADIO FREQUENCY (RF) INTERFERENCE

Radio frequency (RF) interference with other devices may cause intermittent loss of information. Wireless Internet access points, microwaves, cordless phones, or other wireless devices may cause frequency interference. To mitigate the chance of interference, set wireless access points to the lowest channel possible and keep indoor cycles away from interfering devices. To change the channel on the access point, please consult manufacturer's documentation.

CycleOps utilizes ANT+ technology to ensure a robust and reliable connection between the various sensors used in our products. Sensors are defined as power meter sensors, heart rate strap sensors, cadence sensors, speed sensors, and controlled resistance sensors.

Statement of Compliance for FCC and Industry Canada:
This device complies with Industry Canada and Part 15 of the FCC Rules. Operation is subject to the following two conditions: (1) This device may not cause harmful interference, and (2) this device must accept any interference received, including interference that may cause undesired operation.

The term "IC" before the radio certification number only signifies that Industry Canada technical specifications were met. Changes or modifications to this device not expressly approved by the party responsible for compliance with FCC regulations (the manufacturer) could void the user authority to operate the equipment.

This equipment has been tested and found to comply with the limits for a Class B digital device, pursuant to part 15 of the FCC Rules. These limits are designed to provide reasonable protection against harmful interference in a residential installation. This equipment generates, uses and can radiate radio frequency energy and, if not installed and used in accordance with the instructions, may cause harmful interference to radio communications. However, there is no guarantee that interference will not occur in a particular installation.

If this equipment does cause harmful interference to radio or television reception, which can be determined by turning the equipment off and on, the user is encouraged to try to correct the interference by one or more of the following measures:

- Reorient or relocate the receiving antenna.
- Increase the separation between the equipment and receiver.
- Connect the equipment into an outlet on a circuit difference from that to which the receiver is connected.
- Consult the dealer or an experienced radio/TV technician for help.

CHAPTER 9: IMPORTANT PRECAUTIONS

It is the responsibility of the owner to ensure that all users of this CycleOps Pro Series indoor cycle are adequately informed of all warnings and precautions. For questions regarding this guide, contact Customer Service at the number listed on the back panel of this guide.

WARNING: Always consult with a physician before beginning or modifying any exercise program.

- Stop exercising, if experiencing any kind of pain, including but not limited to: chest pains, nausea, dizziness, or shortness of breath and consult a physician before continuing.
- Always wear proper footwear while using this equipment.
- Do not jump on the indoor cycle.
- Keep power cord away from heated surfaces (400 Pro only).
- Unplug indoor cycle before moving or cleaning it (400 Pro only). To clean, wipe surfaces down with soap and slightly damp cloth only; never use solvents (see Preventative Maintenance).
- At no time should more than one person be on indoor cycle while in operation.
- This indoor cycle should not be used by persons weighing more than 300 pounds. Failure to comply will void the warranty.
- Do not use this indoor cycle in any location that is not temperature controlled, such as but not limited to garages, porches, pool rooms, bathrooms, car ports or outdoors. Failure to comply may void the warranty.
- Use the indoor cycle only as described in this guide.

CHAPTER 10: WARRANTY

Manufacturer's Warranty (under normal use)

Frame (Structural): 10 Years

Parts, Electronics and Appearance: One Year

Excludes wear items:
Brake pads, Chain, Pawls, Seat post sleeve, Handlebar sleeve

In the event of a warranty issue, Saris Cycling Group, Inc. will repair or replace the item at its discretion. Saris Cycling Group, Inc. is not responsible for any indirect or consequential costs or damages associated with the warranty of the product. Our products are not covered under warranty in cases exhibiting signs of abuse, improper maintenance or installation, crash, using the product with non-compatible components, or using the product for purposes for which it was not designed. This warranty is also void if the product has been modified from its original form, including changes in aesthetics, serial numbers or logos.

Warranty Procedures: If it appears that a CycleOps Pro Series indoor cycle component is not working properly, please take the time to inspect and troubleshoot the system as best as possible. In many instances, solutions may be as simple as replacing a battery or adjusting a sensor. Often small parts can repaired at a bike shop, instead of the longer and more expensive option of sending the unit back for repair. To warranty the CycleOps Pro Series indoor cycle, return the product, where purchased or contact Saris Cycling Group, Inc. at 1-800-783-7257.

Copyright
Copyright 2009. All rights reserved. No part of this publication may be copied, photographed, reproduced, translated, transmitted electronically or placed on digital media without the prior written consent of Saris Cycling Group, Inc.

Trademarks
Saris Cycling Group, Inc , CycleOps and the PowerTap logo, are all registered trademarks of Saris Cycling Group, Inc. All other product, brand, or trade names used in this guide may be trademarks or registered trademarks of their respective owners.

Modifications
Saris Cycling Group, Inc reserves the right to make improvements and/or updates to the products described herein at any time without notice.